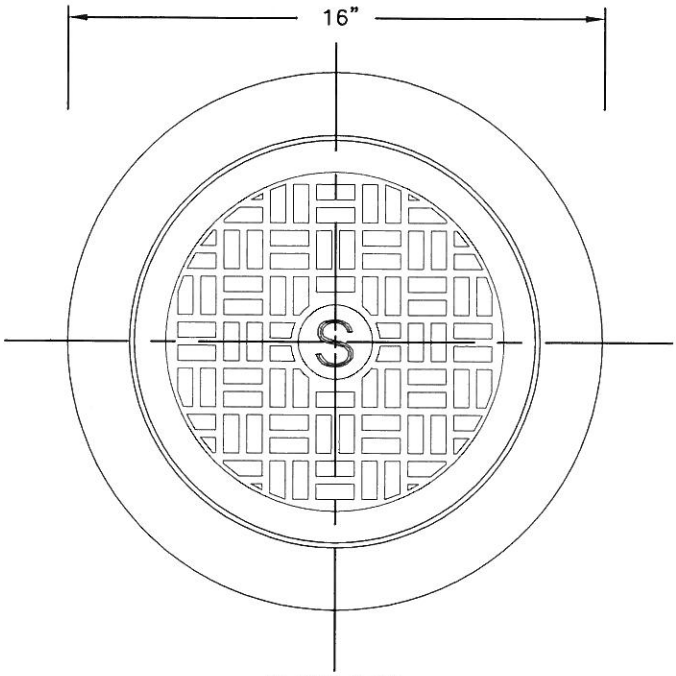

PLAN VIEW

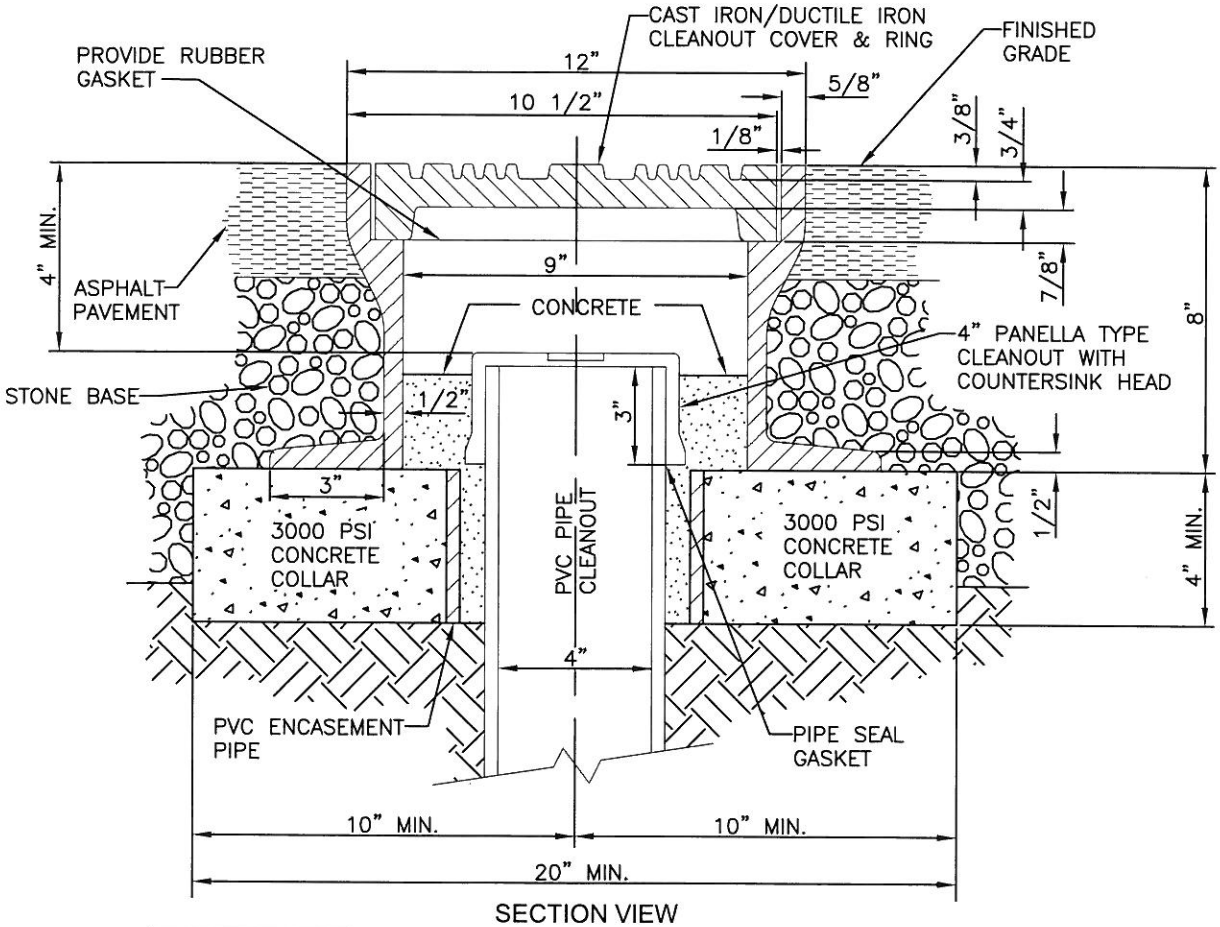

SECTION VIEW

JRP APPROVED BY: WEC DRAWN BY: DATE: 03/05/2010	SANITARY SEWER TRAFFIC BEARING CLEANOUT DURHAM COUNTY, NORTH CAROLINA ENGINEERING DEPARTMENT	SCALE: NTS DETAIL NO. DUCO - 008